Abbyson™

# Eiffel 100% Full Grain Vintage Leather 3 Piece Sectional Sofa

## Overall Dimensions:

- Overall Dimensions: 119″ W x 69″ D x 35" H
- Left Facing Chaise: 33″W x 69″D x 35″H
- LAF Chaise Weight: 90.39 lbs
- Armless Loveseat: 53″ W x 40″ D x 35″ H
- Loveseat Weight: 77.16 lbs
- Right Facing Chaise: 33″W x 69″D x 35″H
- RAF Chaise Weight: 90.39 lbs

## Additional Dimensions:

- Seat cushions are 20" high off the ground
- Legs are 2" tall

**Door width required for delivery: 34″**

Floor Plan

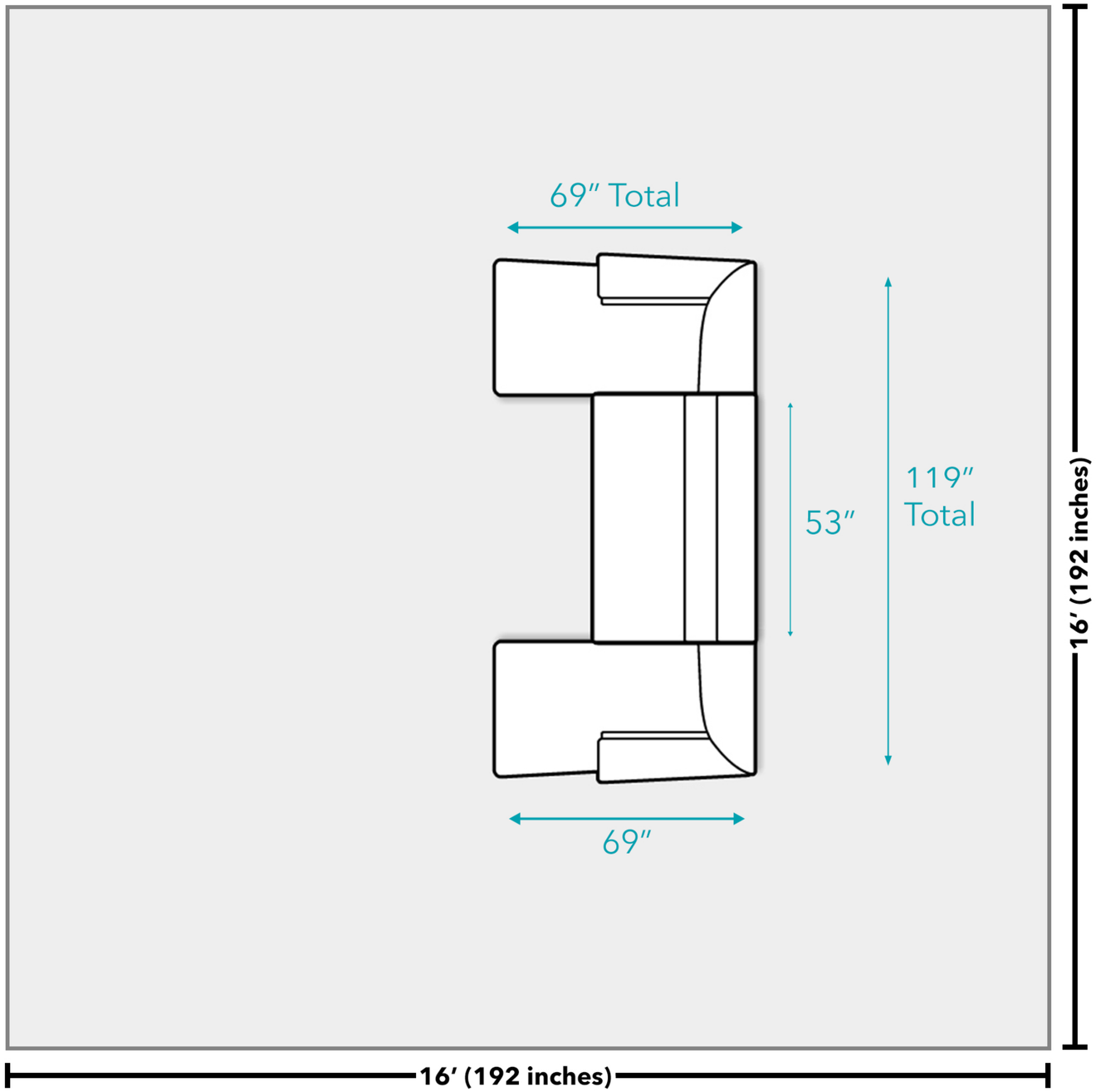


**National Average Living Room Size**

As of 2018, Dimensions Guide estimates that the average living room is a 16x16 foot square. Depending on the size of your home, including the number of people in your household, it may make sense for your living room to be a different size or shape. All measurements are approximate and are provided for informational purposes only.

© Copyright Abbyson Living 2018