makers of living experience™

Fabric Accent Chair

BR-10815

ASSEMBLY INSTRUCTIONS

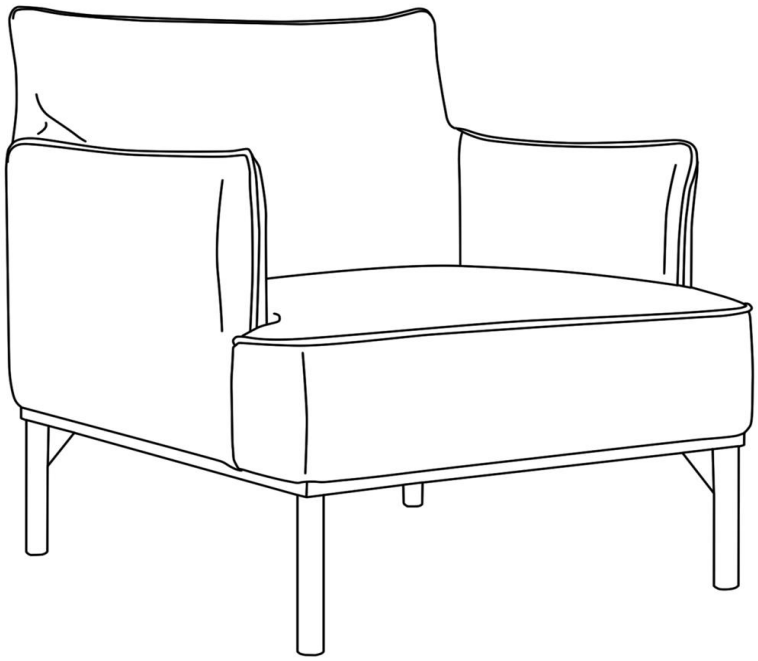

Date: 6/12/2023

For assistance with assembly or customer service, please contact the Abbyson Customer Experience Team
Toll Free at 1-888-406-0838

www.abbyson.com

IMPORTANT SAFETY INSTRUCTIONS:

- Read all instructions carefully before unpacking assembly parts. Sharp, exposed staple tips can cause injury. For your protection, please remove any exposed staples used in packing.
- For your safety, assembly by two or more adults is recommended.
- Use only vendor supplied hardware to assemble. Using unauthorized hardware could jeopardize the structural intergrity of the item.
- Keep instructions for future use.
- Intended for residential use only.
- Keep small parts and hardware out of the reach of children.

PRE-ASSEMBLY INSTRUCTIONS:

- Remove all parts and hardware from the box and place them on a carpeted or scratch-free work surface.
- To avoid accidentally discarding small parts or hardware, please do not dispose of any contents until assembly is complete.
- Prior to starting assembly, use the parts and hardware lists to identify and separate each of the pieces included.
- Do not over-tighten screws or bolts.

TABLE OF CONTENTS

Parts List / Hardware List **Page 3**

Assembly Instructions **Page 4**

Care & Maintenance / Warnings **Page 5**

PARTS LIST/HARDWARE LIST

PART #	PICTURE	PART DISCRIPTION	QTY
A		Metal Leg (92202410001)	4
B		Bolt (950340030 M6*1.25/2CM)	8
C		Flat washer (950500034)	8
D		Lock washer (950510007)	8
E		Allen key (950520003)	1

Thank you for your purchase. Be sure to check all packing material carefully for small parts which may have come loose inside the carton during shipment. Identify and count all parts and compare with the parts and hardware lists.

STEP 1

Open the Zippered pouch

1. Open the zipper pouch, Remove the Metal legs (A) and Hardware (B, C, D, E) from the bottom of the chair.

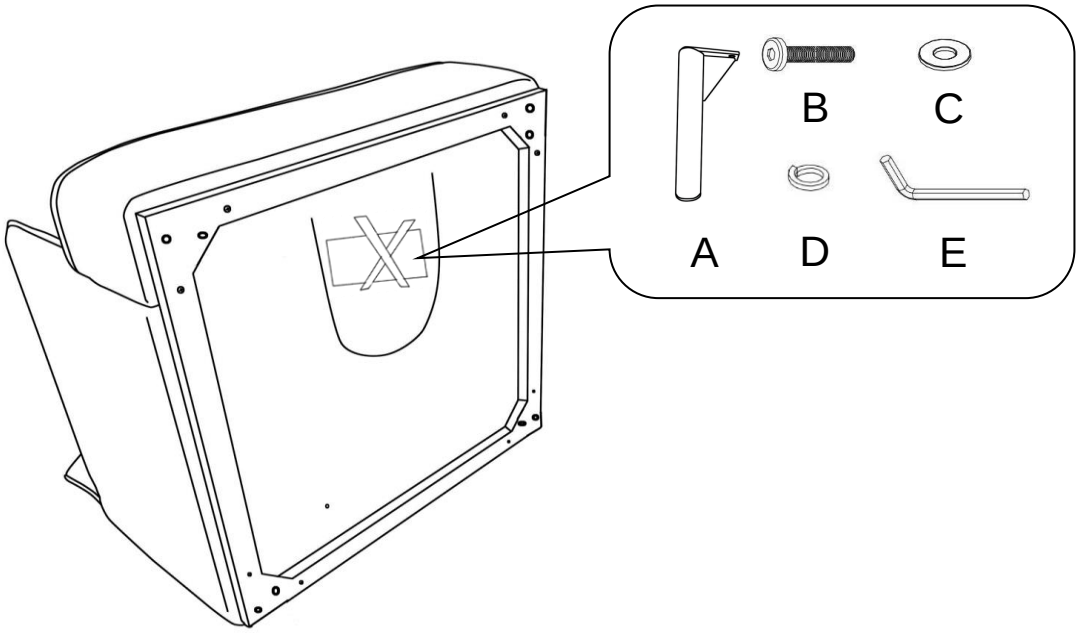

STEP 2

Attach Metal Legs

1. Put the Lock washer (D) on the Bolt (B) and then put the Flat washer (C) in the order pictured below.
2. Attach the Metal Leg (A) into the predrilled corner seat holes, by inserting the bolts (B) into the leg holes, then tighten with the Allen key (E).

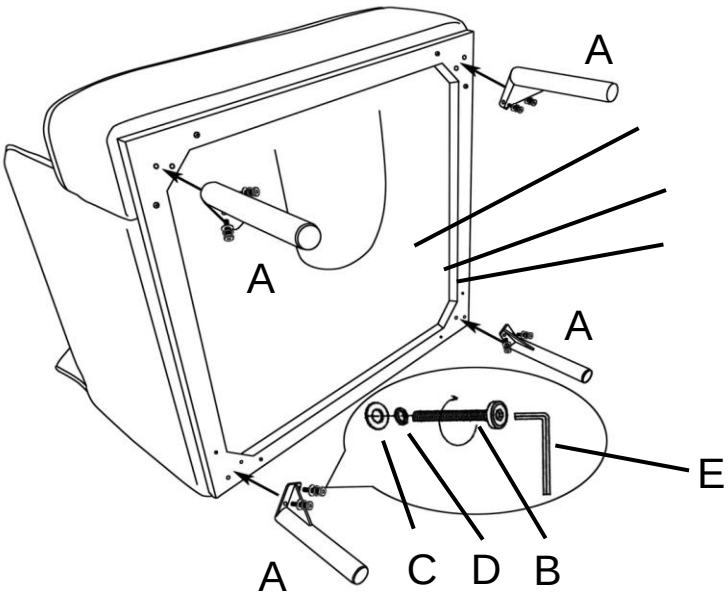

CARE & MAINTENANCE

Fabric Care Tips

- Be sure to vacuum on a weekly basis so dust and dirt do not settle into the fabric.
- Wrinkles in the fabric are a natural part of normal wear
- Fabric can fade when exposed to direct sunlight over a long period of time.
- To minimize fading, avoid placing your furniture in direct sunlight.
- Avoid cleaners which use chemical products. Many of these are harsh and not safe for use on upholstery.
- Stress to the fabric may result in tears and when stretched, upholstery may not completely return to its original shape.
- Avoid sitting in one area and use the seating areas evenly for even wear.
- Fabric is not resistant to animals. Allowing pets on your upholstered furniture is not recommended.
- If pillow cushions are sewn to the frame, any pulling or tugging may result in a tear.

WARNING

- Do not use this product unless all screws and bolts are securely tightened.
- Check that all screws and bolts are secure every three months or as needed
- Dispose of packing material properly. Do not use plastic cover as head covering as it may cause suffocation.
- Do not use this product as a stepladder.
- Use this product for intended purpose only.
- Intended for residential use only.

Thank you for bringing Abbyson into your home. We truly appreciate your business.
To discover more home furnishings that fit your style visit us at Abbyson.com.