Assembly Instructions & User's Manual

For

Kaylen 5pc High Dining Set, Ash blonde - Chair

Item Number: 990292966
Model Number: TP-0002ASHB5PDI

Abbyson Customer Experience Team (spare/replacement parts): 1-888-406-0838
or Email: samsclub@abbysonliving.com

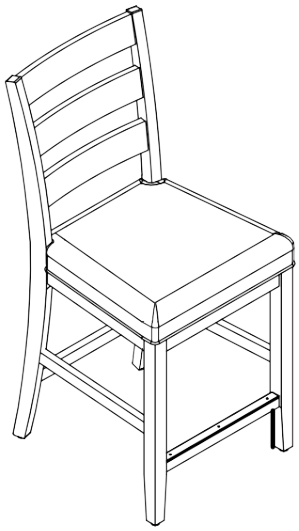

THIS ASSEMBLY MANUAL CONTAINS IMPORTANT SAFETY INFORMATION.
PLEASE READ AND KEEP FOR FUTURE REFERENCE.

Table of Contents

Important Safety Information **3**

Before Assembly 3

Care & Use **3**

Package Contents 4

Product Information 4

Components 5

Hardware 5

Tools 5

Step 1 – Step 6. 6,9

Warning 9

Troubleshooting 9

Care & Use and Storage Instructions **10**

Storage Instructions 10

Warranty Information 11

Important Safety Information

- Please read all instructions carefully before assembling this product.
- Where applicable, and for your safety, assembly by an adult is stronglyrecommended.
- Use only vendor-supplied hardware to assemble this item. Using unauthorizedhardware could jeopardize the structural integrity of the item.
- Hardware may loosen overtime. Periodically check that all connections are tight.
- Keep instructions for future use.
- Intended for residential use only.
- Keep small parts and hardware out of the reach of children.

Before Assembly

- Remove all parts and hardware from the box. Place all items on a carpeted or scratch-free work surface, as this will avoid damaging parts during assembly.
- The shipping box can provide an ideal work surface if none is available.
- Use the components and hardware lists below to identify, inventory and separate each of the hardware and components included.
- To avoid accidentally discarding small components or hardware, do not dispose of any packaging or contents of the shipping carton until assembly is complete.
- DO NOT USE power tools unless it is explicitly identified in this manual as required for use during assembly. Power tools can damage the fasteners, hardware and/or components.
- Do not fully tighten all fasteners / screws until all parts are in place. Failure to
- follow these instructions may cause the fasteners / screws to misalign during assembly.

Care & Use

- Wood color can fade and/ or sun bleaching can occur when exposed to direct sunlight over a long period of time.
- Avoid placing your furniture in direct sunlight.
- Rearrange accessories over time to prevent spot bleaching.
- For daily maintenance, use clean and soft rags or cloths to wipe off dust on the surface along the grains.
- Never use damp rags or anything with a hard surface to rub onto the furniture.
- Always keep surfaces clear of any acid or chemical substances.
- To avoid damage refrain from stacking large and/or heavy objects on top of the furniture.
- Avoid cleaners which use chemical products. Many of these are harsh and not safe for use on upholstery

Package Contents

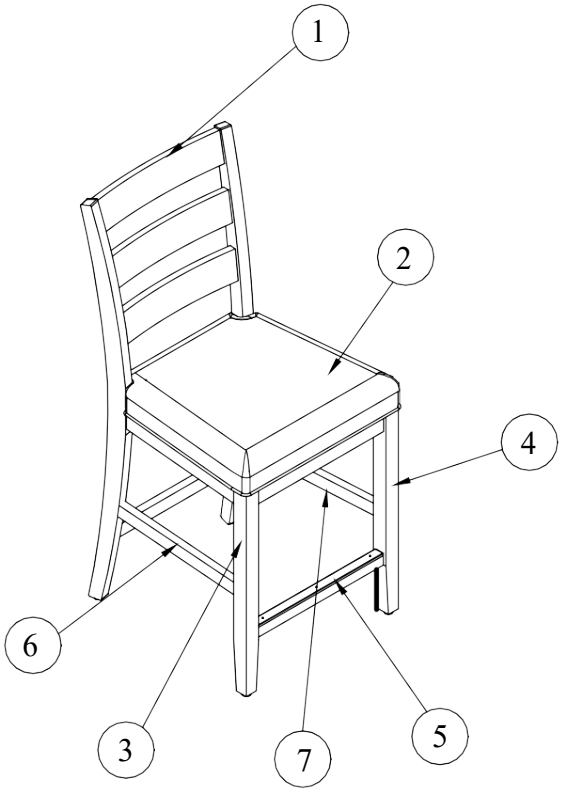

Component	Description	Quantity		Component	Description	Quantity
1	Backrest	1		5	Front stretcher	1
2	Seat Cushion	1		6	Left stretcher	1
3	Front left leg	1		7	Right stretcher	1
4	Front right leg	1				

Product Information

Product Dimensions: 40.63” x 22.13" x 19”H (103cm x 56cm x 48cm)

Product Weight Capacity: Chair Supports up to 300 lbs. (136 kg)

Components

Backrest (1) Qty: 1 	Seat Cushion (2) Qty: 1 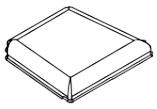	Front left leg (3) Qty: 1
Front right leg (4) Qty: 1 	Front stretcher (5) Qty: 1 	Left stretcher (6) Qty: 1 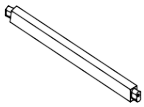
Right stretcher (7) Qty: 1 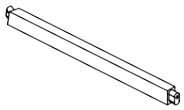		

Hardware

Hex Nut (A) Qty: 4 pcs 	Spring washer 5/16" x 13mm (B) Qty: 4pcs 	Flat Washer 5/16" x 19mm (C) Qty: 4pcs
Round pan head wood screw #4*1-1/2" (D) Qty: 6 pcs 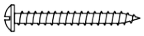	Bolt 1/4" x 1.5" Spring washer 1/4" x 13mm; Flat Washer 1/4" x 19mm; (E) Qty: 2 pcs 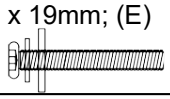	Bolt 5/16" x 3" Spring washer 5/16" x 13mm; Flat Washer 5/16" x 19mm; (F) Qty: 4 pcs 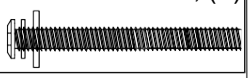
Allen key **(G)** Qty: 1 pc 	Lock wrench (H) Qty: 1 pc 	

Tools

Phillips Screwdriver (Not included)		
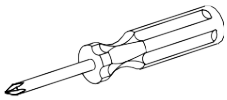		

Step 1

Attach the Backrest (1) to the Seat Cushion (2)
Use then bolt, spring washer, flat washer (E) to attach the assembled seat frame to the middle rail of one backrest with the provided Allen key (G)
Note: Do not over tighten the bolts.

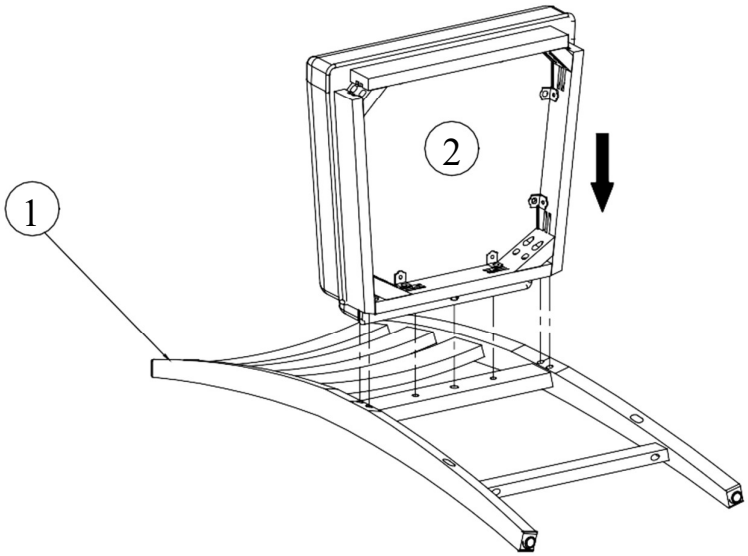

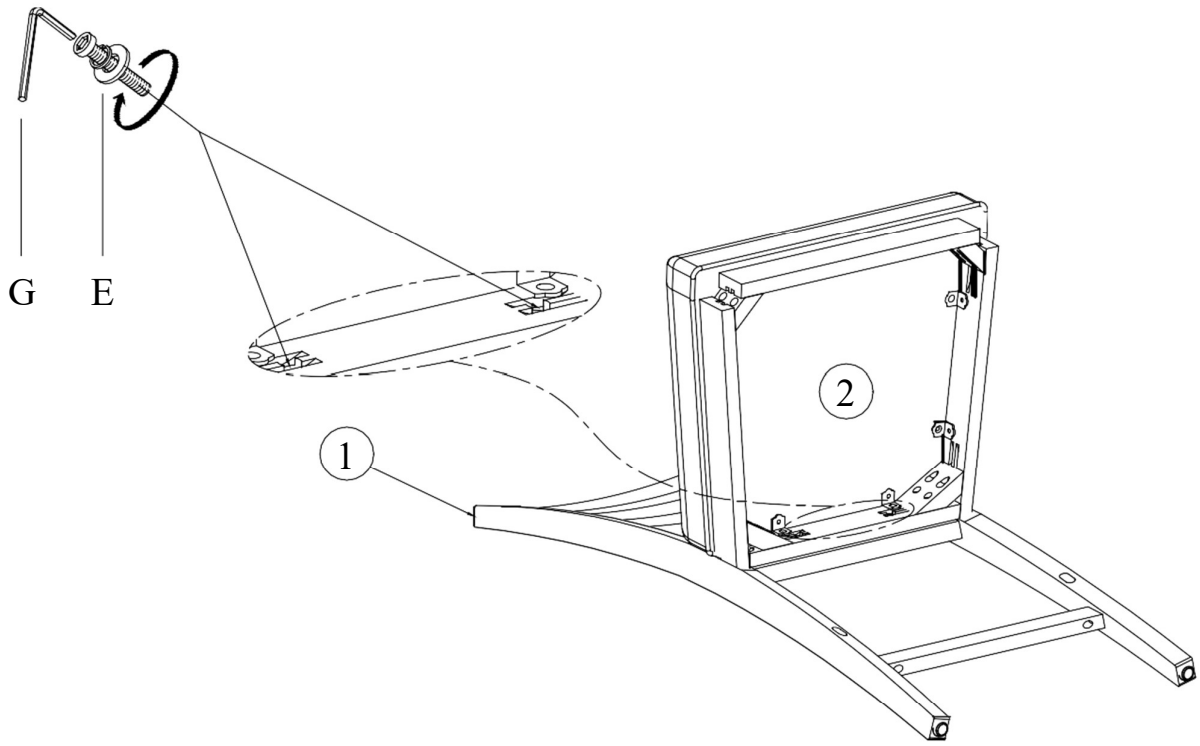

Step 2

Use then bolt, spring washer, flat washer (F) to attach the assembled seat frame to the middle rail of one backrest with theprovided Allen key (G) Note: Do not over tighten the bolts.

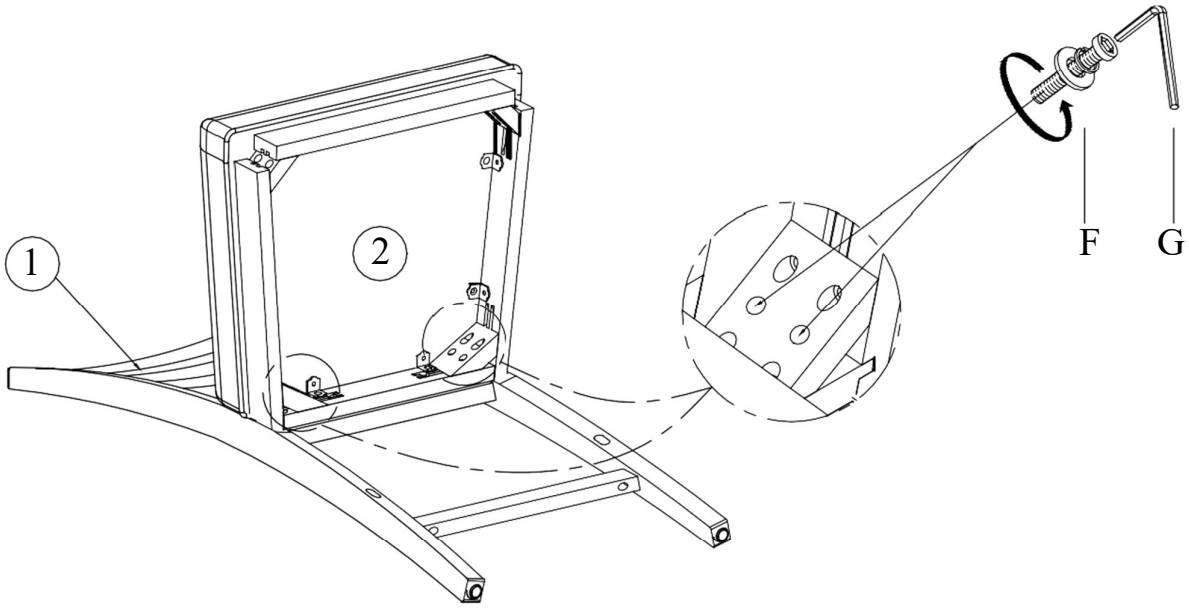

Step 3

Step 3.1: Attach the Right stretcher (7) to the Backrest (1)
Step 3.2: Attach the Front right leg (4) to the Seat Cushion (2) and Right stretcher (7)
Step 3.3: Attach the Left stretcher (6) to the Backrest (1)
Step 3.4: Attach the Front left leg (3) to the Seat Cushion (2) and Left stretcher (6)
Step 3.5: Attach the Front stretcher (5) to the Front left leg (3) and Front right leg (4)

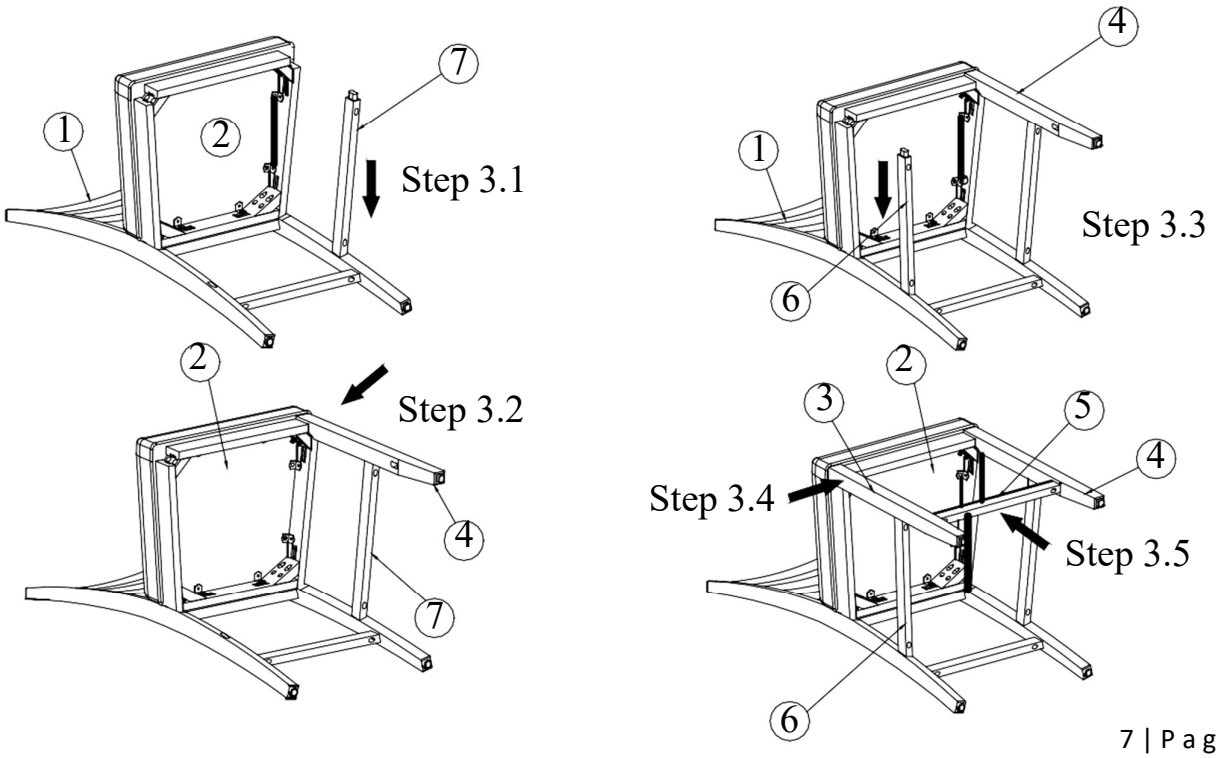

Step 4

Use the flat washer (C), the spring washer (B), and hex nut (A). Then tightly fasten all bolts with the provided lockwrench (H). Repeat for other side

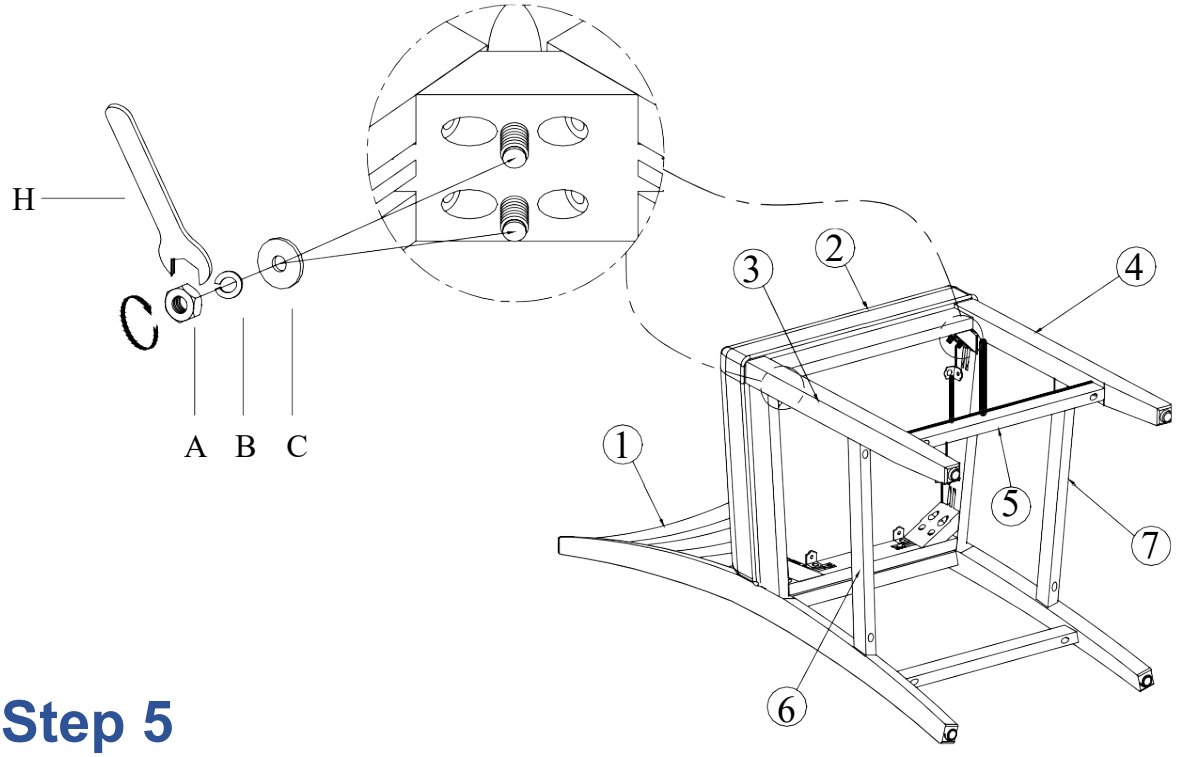

Step 5

Step 5: Tighten screws (D) by screw driver into all stretchers (5) (6) (7).

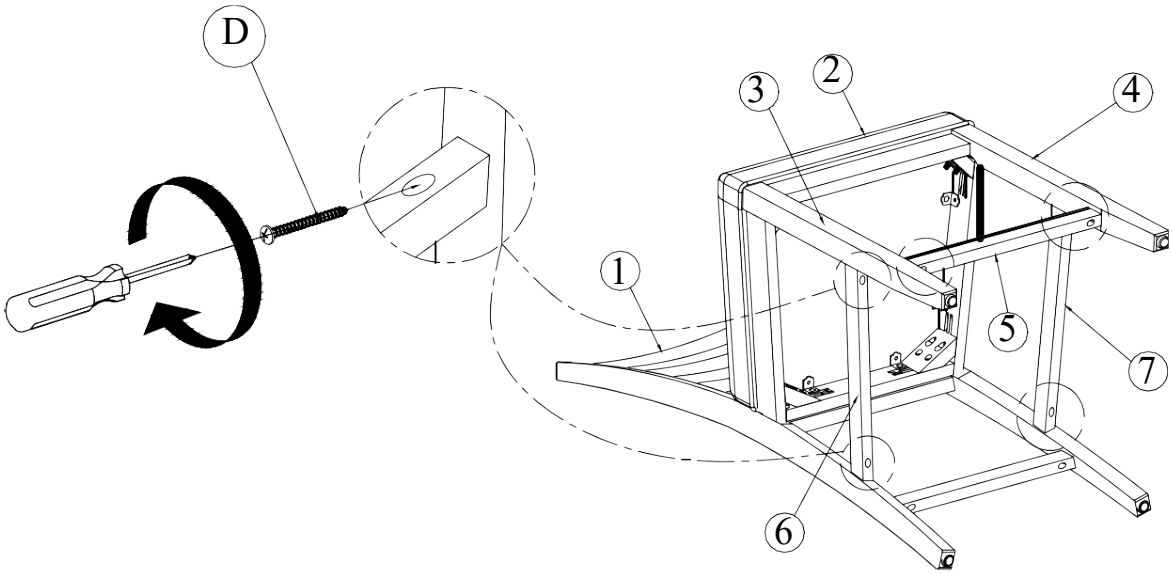

Step 6

Turn the seat over when assembly is complete. To adjust chair level, twist the nylon glide on bottom of chair legs until sturdy. Repeat the same procedure to assemble the other chairs.

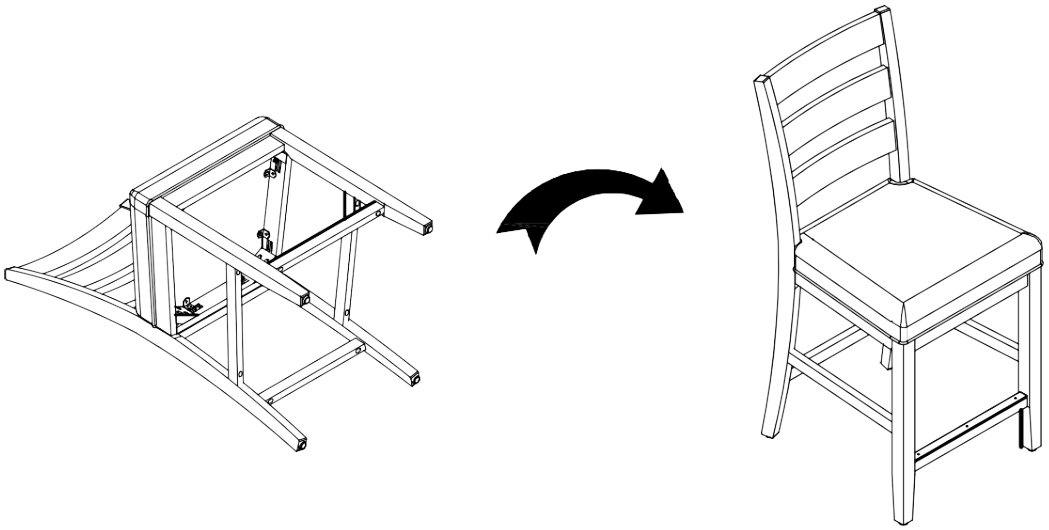

Warning

- Do not use this product unless all screws and bolts are securely tightened.
- Check that all screws and bolts are secure every three months or as needed.
- Dispose of packing material properly. Do not use plastic cover as head coveringas it may cause suffocation.
- Do not use this product as a stepladder.
- Use this product for intended purpose only.
- Intended for residential use only.

Troubleshooting

Problem	Possible Cause	Prevention / Solution
Tilting / Leaning	Surface not level	Orient adjustable feet until level

Care & Use Instructions

Care	Use clean and soft rags or cloths to wipe off dust on the surface along the grains. Always keep surfaces clear of any acid or chemical substances. Avoid cleaners that use chemical products. Avoid placing furniture in direct sunlight. Avoid extreme changes in temperature by arranging furniture away from radiators, heat, and air conditioning units. Refrain from stacking large and/or heavy objects on top of the furniture. Rearrange accessories over time to prevent spot bleaching. Wood color can fade and/ or sun bleaching can occur when exposed to direct sunlight over a long period of time.
Use	These chairs are intended only for normal use with all four chair legs on the ground. The consumer not designed to be sat with only two chair legs or the other optionon the ground as from tipping back, forward, or to the side.

Storage Instructions

Item Name fill in here	1. Carefully place all components into shipping box and/or provided container tape it shut. 2. When not in use, please store your item in a cool, dry place away from sunlight. 3. Exposing your item to excessive heat or humidity may damage your item.

Warranty Information

Warranty

This product is covered by the Sam's Club Member Satisfaction Guarantee. Please visit samsclub.com for more information.

This product's components have a 1-year guarantee against defects in material and/or workmanship. If you have any questions regarding the warranty or spare / replacement parts, please call our toll-free number 1-888-406-0838 or email us at samsclub@abbysonliving.com

NOTE: Please consider recycling all applicable packaging material.

Distributed by Sam's West Inc.
2101 SE Simple Savings Dr.
Bentonville, Arkansas 72716-0745

Made in VIET NAM

Abbyson™