Assembly Instructions & User's Manual

for

Kaylen 5pc High Dining Set with Storage, Ash Blonde -Table

Item Number: 990292966
Model Number: TP-0002ASHB5PDI
Abbyson Customer Experience Team (spare/replacement parts): 1-888-406-0838
or Email: samsclub@abbysonliving.com

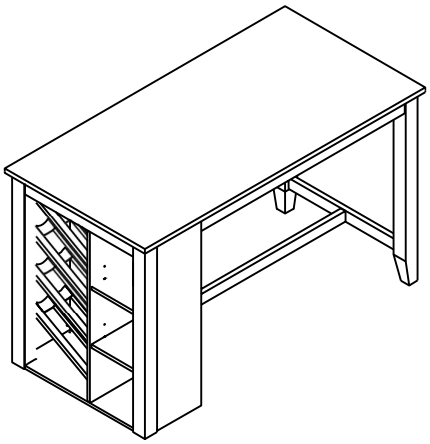

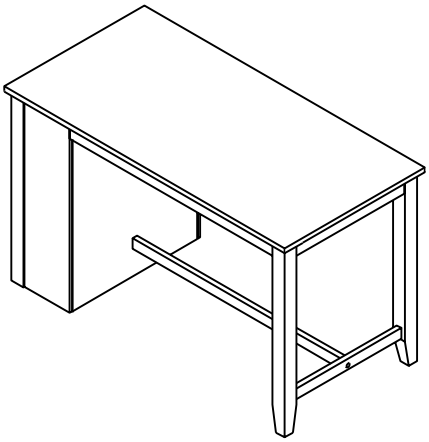

THIS ASSEMBLY MANUAL CONTAINS IMPORTANT SAFETY INFORMATION.
PLEASE READ AND KEEP FOR FUTURE REFERENCE.

Table of Contents

Important Safety Information 3
Before Assembly 3
Care & Use **3**
Package Contents 4
Product Information 4
Hardware 5
Tools 5
Step 1 6
Step 2 7
Step 3 7
Step 4 8
Step 5 9
Step 6 10
Warning 11
Troubleshooting 11
Storage Instructions 11
Warranty Information 12

Important Safety Information

- *Please read all instructions carefully before assembling this product.*
- *Where applicable, and for your safety, assembly by an adult is strongly recommended.*
- *Use only vendor-supplied hardware to assemble this item. Using unauthorized hardware could jeopardize the structural integrity of the item.*
- *Hardware may loosen overtime. Periodically check that all connections are tight.*
- *Keep instructions for future use.*
- *Intended for residential use only.*
- *Keep small parts and hardware out of the reach of children.*

Before Assembly

- *Remove all parts and hardware from the box. Place all items on a carpeted or scratch-free work surface, as this will avoid damaging parts during assembly.*
- *The shipping box can provide an ideal work surface if none is available.*
- *Use the components and hardware lists below to identify, inventory and separate each of the hardware and components included.*
- *To avoid accidentally discarding small components or hardware, do not dispose of any packaging or contents of the shipping carton until assembly is complete.*
- ***DO NOT USE** power tools unless it is explicitly identified in this manual as required for use during assembly. Power tools can damage the fasteners, hardware and/or components.*
- *Do not fully tighten all fasteners / screws until all parts are in place. Failure to follow these instructions may cause the fasteners / screws to misalign during assembly.*

Care & Use

- *Wood color can fade and/ or sun bleaching can occur when exposed to direct sunlight over a long period of time.*
- *Avoid placing your furniture in direct sunlight.*
- *Rearrange accessories over time to prevent spot bleaching.*
- *For daily maintenance, use clean and soft rags or cloths to wipe off dust on the surface along the grains.*
- *Never use damp rags or anything with a hard surface to rub onto the furniture.*
- *Always keep surfaces clear of any acid or chemical substances.*
- *To avoid damage refrain from stacking large and/or heavy objects on top of the furniture.*
- *Avoid cleaners which use chemical products. Many of these are harsh and not safe for use on upholstery*

Package Contents

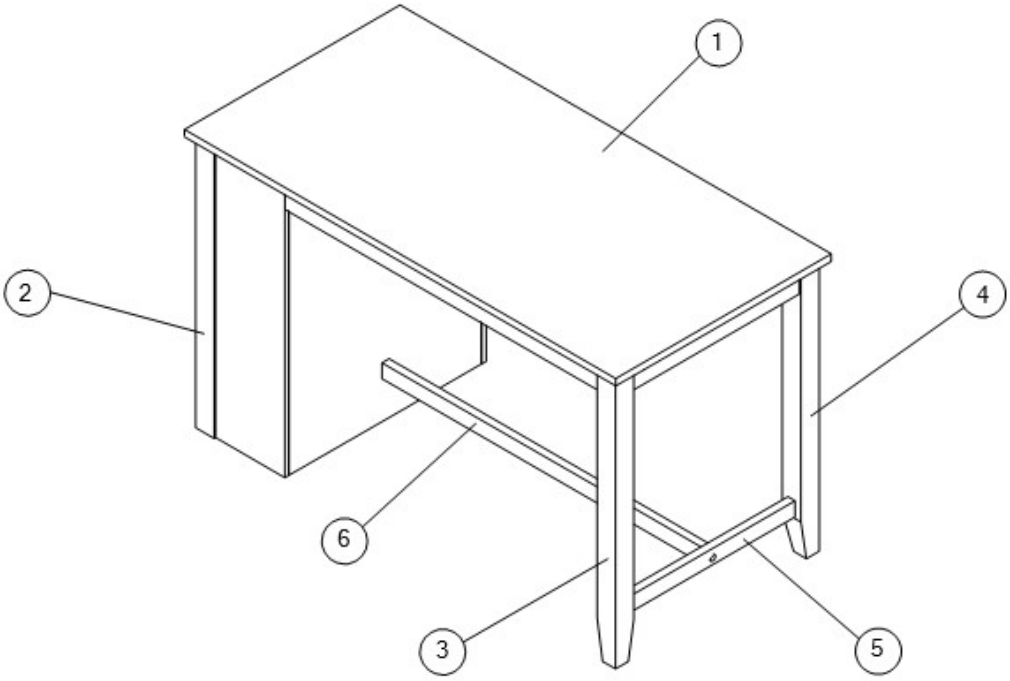

Component	Description	Quantity		Component	Description	Quantity
1	Table - Top	1		4	Table - Leg (R)	1
2	Table - Storage Base	1		5	Side Stretcher	1
3	Table - Leg (L)	1		6	Center Stretcher	1

Product Information

Product Dimensions: **60” x 30” x 36”H (152.4cm x 76.2cm x 91.3cm)**

Product Weight Capacity – **Table supports up to 350 lbs. (158.7 kg)**

Components

Table - Top (1) Qty: 1	Table - Storage Base (2) Qty: 1	Table - Leg Left (3) Qty: 1
Table - Leg Right (4) Qty: 1	Side Stretcher (5) Qty: 1	Center Stretcher (6) Qty: 1

Hardware

Bolt 5/16" x 1-1/2"L; Spring washer Ø5/16"x13mm; Flat washer Ø5/16*16mm; (A) Qty: 9	Bolt 5/16" x 2"L; Spring washer Ø5/16"x13mm; Flat washer Ø5/16*16mm; (B) Qty: 4	Round pan head screw #4*2"L(C) Qty: 2
Wooden Plug Ø17xØ19x10mmL (D) Qty: 1	Allen key 4mm (E) Qty: 1	

Tools

Screwdriver (Not included)	Rubber Mallet (Not included)

Step 1

Stand the assembled unit upright on a flat surface, Put the storage Base (2) on the bottom of the top (1). Then using the Allen key (E) to tight fasten bolts, spring washer, flat washer (A)

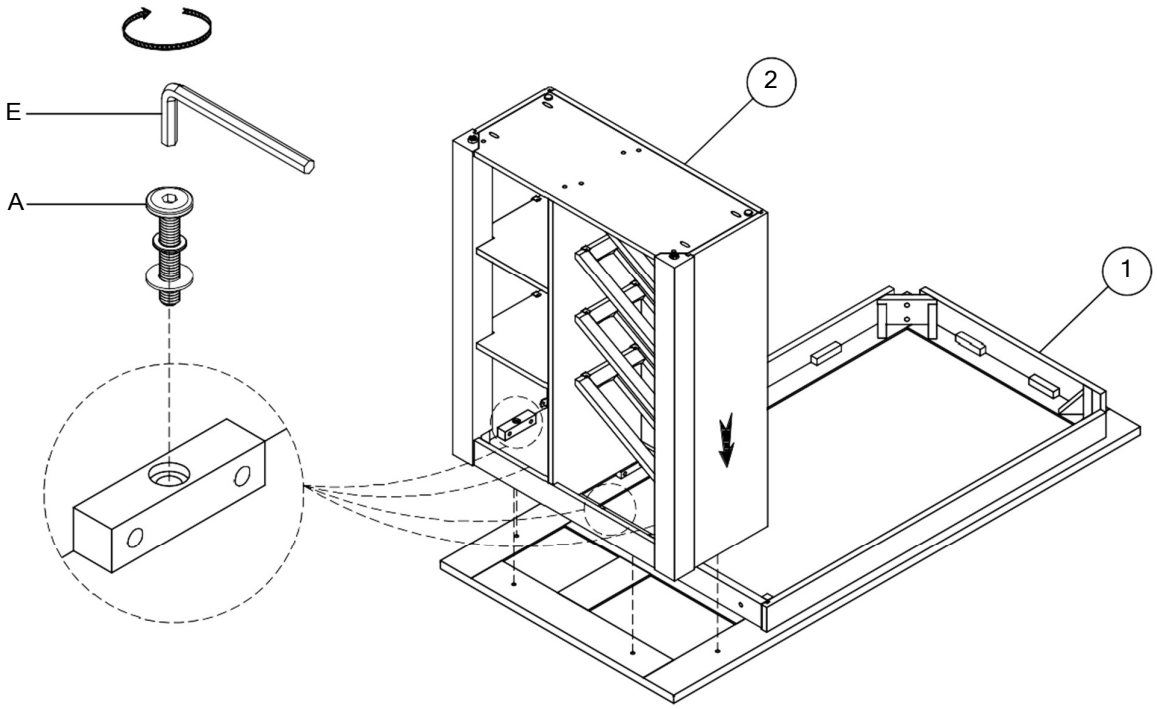

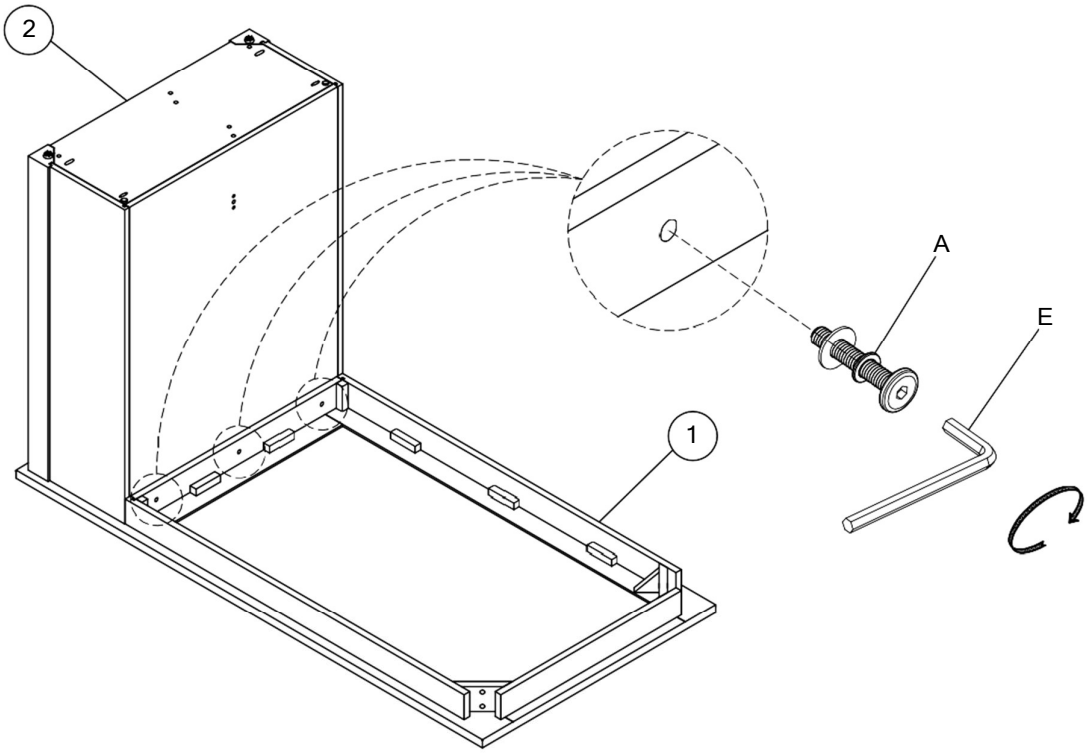

Step 2

Attach the side stretcher (5) to the corresponding holes on the center stretcher (6). Then using the Allen key (E) to tight fasten bolt, spring washer, flat washer (A). Secure the wood plug (D) to the stretcher (5) avoid choking hazard.

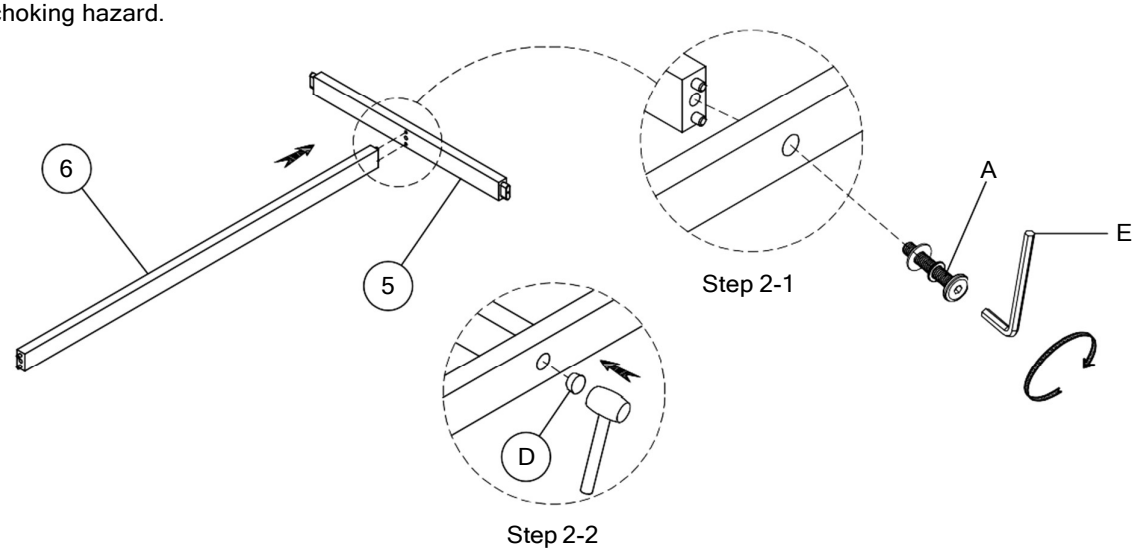

Step 3

Attach the leg (3,4) to the corresponding holes on the table top (1) and with side stretcher (5). Attach the center stretcher (6) to the corresponding holes on the storage Base (2). Then using the Allen key (E) to tight fasten bolt, spring washer, flat washer (B)

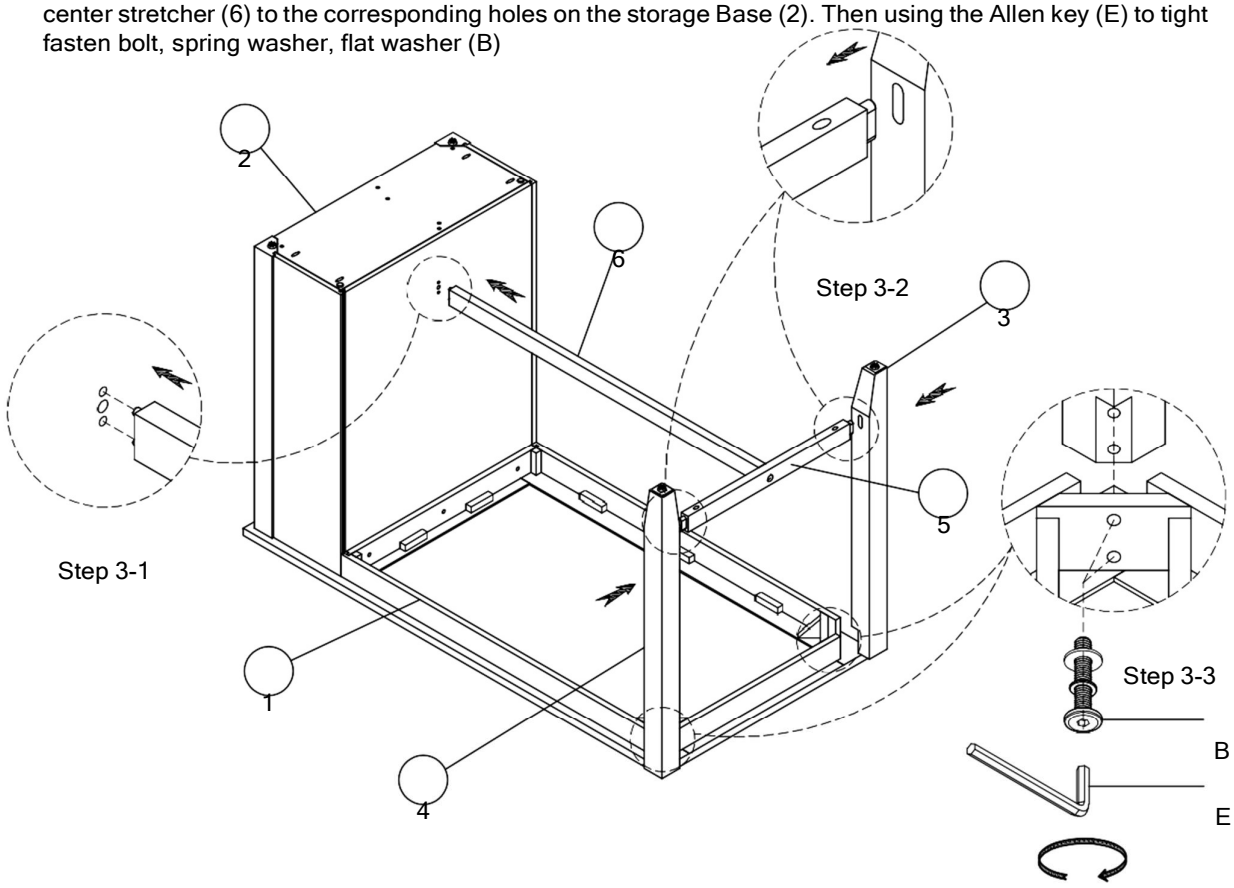

Step 4

Using the Allen key (E) to tight fasten bolts, spring washer, flat washer (A). Attach the side stretcher (5) tothe leg (3,4).

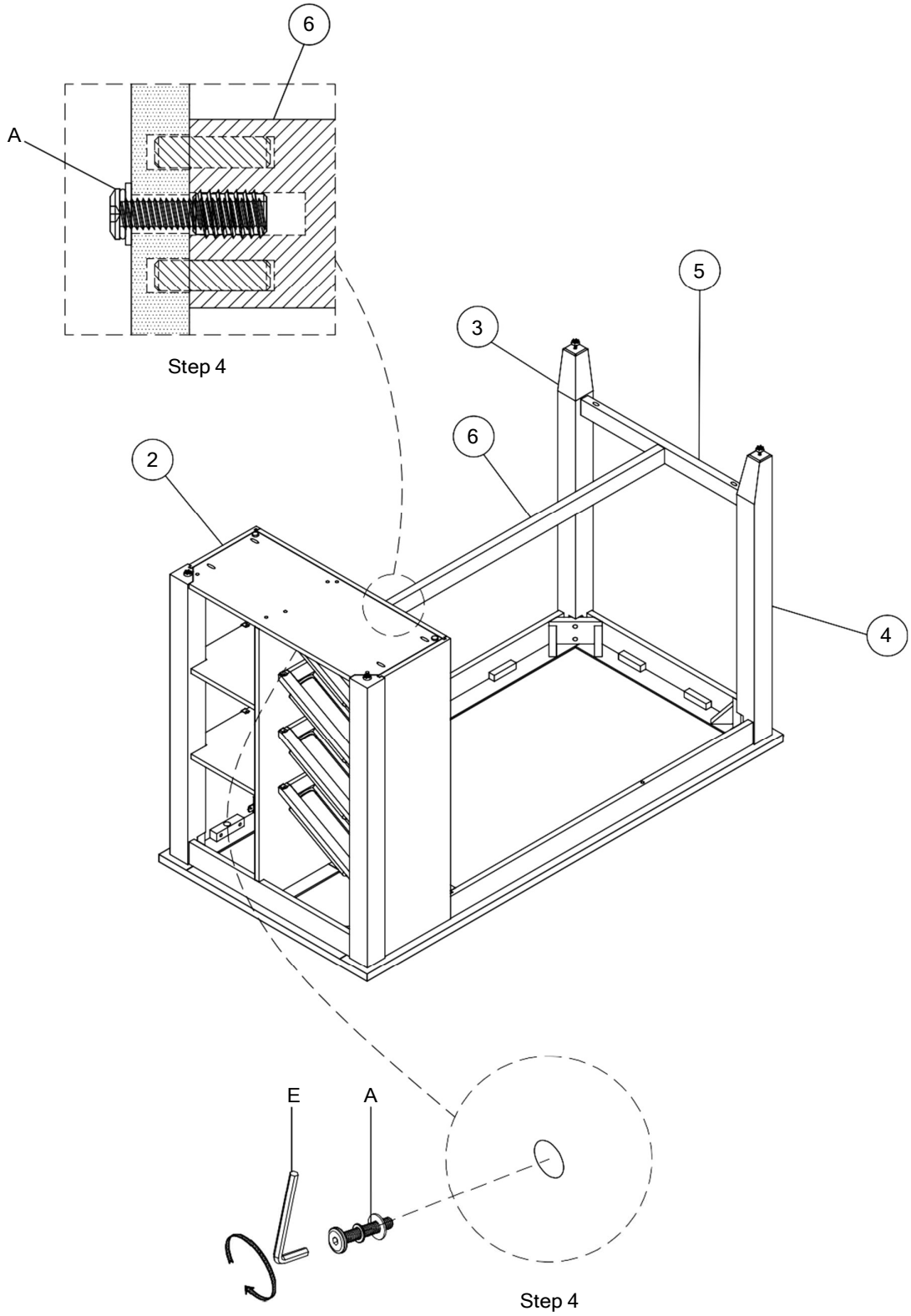

Step 5

(5-1) Tighten all screws (c) by screw driver.
(5-2) Adjust glide.

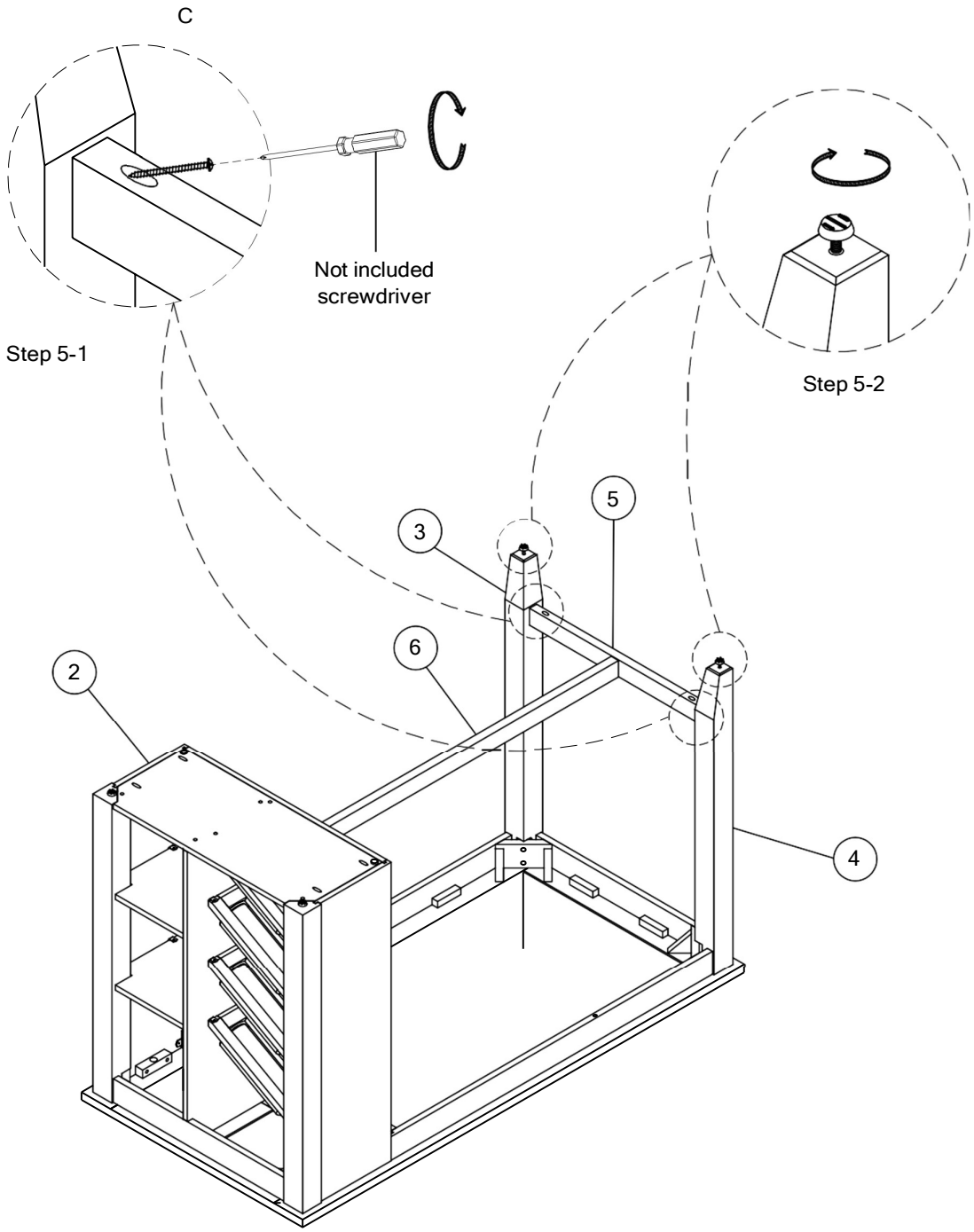

Step 6

Removable Shelf

The shelf of the table storage base can be adjusted up or down with the three levels. If you want to remove, please lift the shelf a little bit (6.1) and pull out the shelf pin – work with all the shelf pins until you can align. Then decide which level (6.2) you want by putting all the shelf pins into the hole. Adjust shelf to balance.

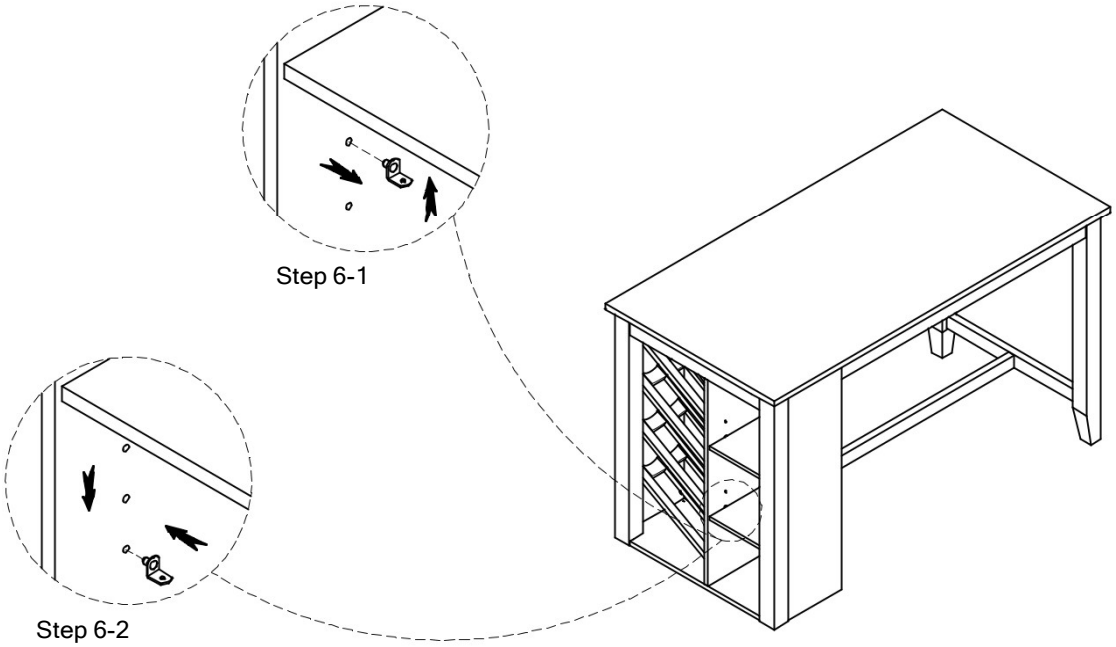

Assembly is complete.

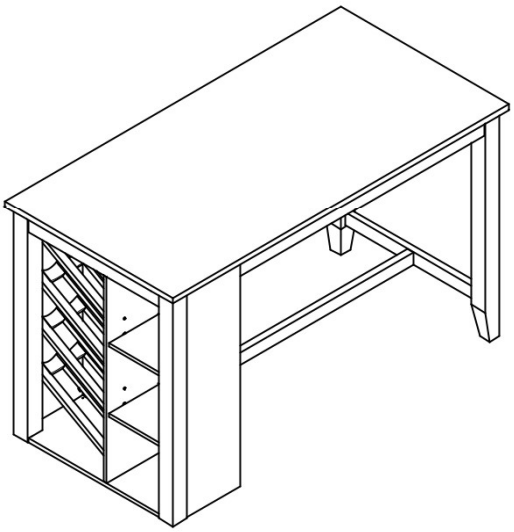

Warning

Do not use this product unless all screws and bolts are securely tightened. Check that all screws and bolts are secure every three months or as needed.
Dispose of packing material properly. Do not use plastic cover as head coveringas it may cause suffocation.
Do not use this product as a stepladder. Use this product for intended purpose only. Intended for residential use only.

Troubleshooting

Problem	Possible Cause	Prevention / Solution
Tilting / Leaning	Surface not level	Orient adjustable feet until level

Care & Use Instructions

Care	Use clean and soft rags or cloths to wipe off dust on the surface along the grains. Always keep surfaces clear of any acid or chemical substances. Avoid cleaners that use chemical products. Avoid placing furniture in direct sunlight. Avoid extreme changes in temperature by arranging furniture away from radiators, heat, and air conditioning units. Refrain from stacking large and/or heavy objects on top of the furniture. Rearrange accessories over time to prevent spot bleaching. Wood color can fade and/ or sun bleaching can occur when exposed to direct sunlight over a long period of time.
Use	This dining table can be used to storage wine bottle

Storage Instructions

Item 990292966	1. Carefully place all components into shipping box and/or provided container tape it shut. 2. When not in use, please store your item in a cool, dry place away from sunlight. 3. Exposing your item to excessive heat or humidity may damage your item.

Warranty Information

Warranty

This product is covered by the Sam's Club Member Satisfaction Guarantee. Please visit samsclub.com for more information.

This product's components have a 1-year guarantee against defects in material and/or workmanship. If you have any questions regarding the warranty or spare / replacement parts, please call our toll-free number 1-888-406-0838 or email us at samsclub@abbysonliving.com

NOTE: Please consider recycling all applicable packaging material.

Distributed by Sam's West Inc.
2101 SE Simple Savings Dr.
Bentonville, Arkansas 72716-0745

Made in VIET NAM