Assembly Instructions & User's Manual
for
Member's Mark Hastings 3pc Bistro Set

Item Number:
Model Number: AAX08801-3S
Customer Assistance (spare/replacement parts): 1-800-416-3511
or Email: customerservice@agio-usa.com



THIS ASSEMBLY MANUAL CONTAINS IMPORTANT SAFETY INFORMATION.
PLEASE READ AND KEEP FOR FUTURE REFERENCE.

Table of Contents

Quality Statement.....3

Important Safety Information.....3

Before Assembly.....3

Package Contents.....4

Product Information.....5

Swivel Rocker

- Components.....6
- Hardware.....6
- Tools.....6
- Step1.....7

Table

- Components.....8
- Hardware.....8
- Tools.....8
- Step1-Step4.....9-10

Care & Use and Storage Instructions.....11

Warranty Information.....11

Quality Statement

Questions or Comments?
We would love to hear about your Member's Mark experience! Visit us at:
samsclub.com/membersmarkhelp

Important Safety Information

- *Please read all instructions carefully before assembling this furniture.*
- *For your safety, assembly by two or more adults is strongly recommended.*
- *Use only vendor-supplied hardware to assemble this item. Using unauthorized hardware could jeopardize the structural integrity of the item.*
- *Hardware may loosen overtime. Periodically check that all connections are tight.*

Before Assembly

- *Remove all parts and hardware from the box. Place all items on a carpeted or scratch-free work surface, as this will avoid damaging parts during assembly.*
- *The shipping box can provide an ideal work surface if none is available.*
- *Use the components and hardware lists below to identify, inventory and separate each of the hardware and components included.*
- *To avoid accidentally discarding small components or hardware, do not dispose of any packaging or contents of the shipping carton until assembly is complete.*
- *DO NOT USE power tools unless it is explicitly identified in this manual as required for use during assembly. Power tools can damage the fasteners, hardware and/or components.*
- *Do not fully tighten all fasteners / screws until all parts are in place. Failure to follow these instructions may cause the fasteners / screws to misalign during assembly.*

Package Contents

1Set / 2Ctn

Box 1 of 2：

Component	Description	Quantity
A	Swivel Rocker	2
B	Table Leg	4
C	Leg Connector Bracket	1

A

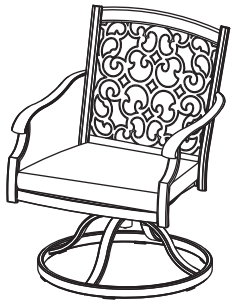

B

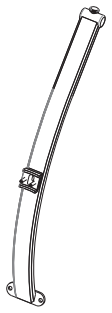

C

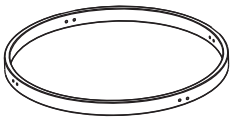

Box 2 of 2：

Component	Description	Quantity
A	Table Top	1

A

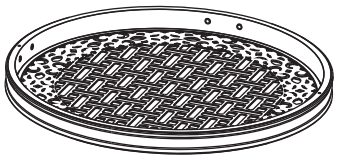

Need Assistance? Visit us at: samsclub.com/membersmarkhelp

Product information



Description	Part No.	Dimensions	Weight Capacity	Factory Assembly
Swivel Rocker	AAX08801	25.5" W *24.25" D *34.5" H	250lb per seat	N
A.Foot Cap 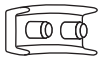	FC0175	N/A	N/A	Y



Description	Part No.	Dimensions	Weight Capacity	Factory Assembly
Table	ALE10515	27.5" RD * 27.75"H	N/A	N
A.Foot Cap 	FC0607	N/A	N/A	Y

Components

A. CHAIR FRAME Part No.AR20323 Qty 1 	B. SWIVEL BASE & ROCKER ASSEMBLY Part No.AR20324 Qty 1 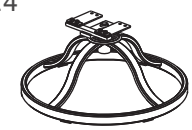	

Hardware

(H1) 5/16" X 40 MM BOLT PART NO:HW0807 Qty: 4 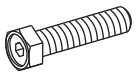	**(H2)** Ø8.0 X 2.3 MM SPRING WASHER PART NO:HW0003 Qty: 4 	**(H3)** "U" METAL PLATE PART NO:HW0618 Qty: 2 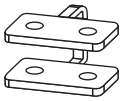
(H4) 5/16" NUT PART NO:HW0015 Qty: 4 	**(H5)** ROCKER PLATE *(FACTORY ASSEMBLY)* PART NO:G0228 Qty: 2 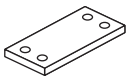	

Tools

(H6) HEX WRENCH-1 PART NO:HW0007 Qty: 1 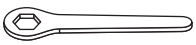	**(H7)** HEX WRENCH-2 PART NO:HW0008 Qty: 1 	

Step 1

(H1) 5/16" X 40 MM BOLT Qty: 4	**(H2)** Ø8.0 X 2.3 MM SPRING WASHER Qty: 4	**(H3)** U" METAL PLATE Qty: 2
(H4) 5/16" NUT Qty: 4	**(H6)** HEX WRENCH-1 Qty: 1	**(H7)** HEX WRENCH-2 Qty: 1

CAUTION:
1.Note the horseshoe shape of the rocker plate. Point the open end of the horseshoe away from you. The arrows on the rocker assembly should be pointing towards you.
2.Failure to place "U" metal plates (H3) under the rocker plates and above the "U" bar exactly as shown in diagram will cause the bolt heads and nuts to damage the structure of the rocker plates and the "U" bar. Damage due to over tightening of bolts or improper assembly could cause injury and may void your warranty.

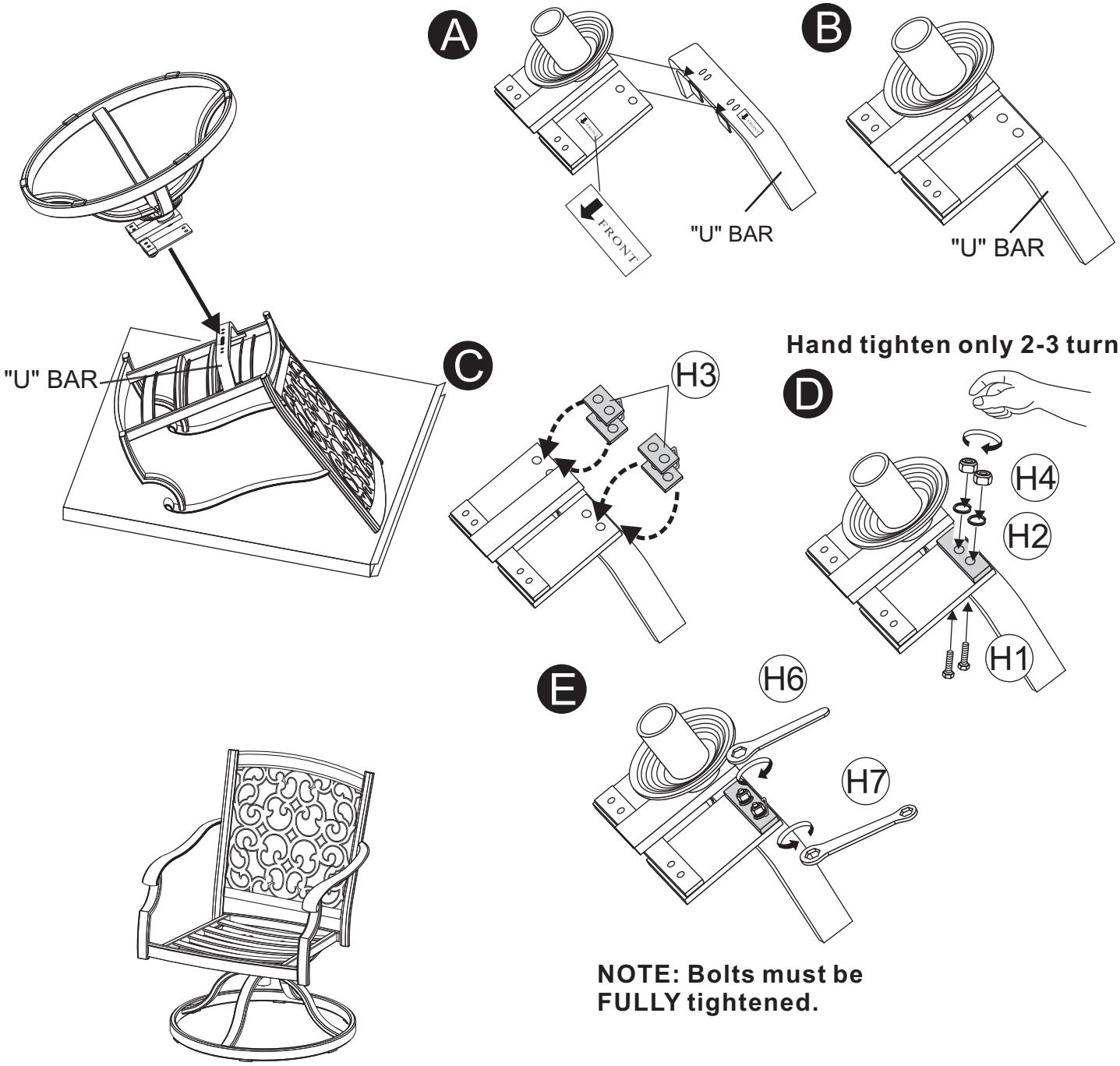

NOTE: Bolts must be FULLY tightened.

Components

A. TABLE TOP Part No.AT73112 Qty 1 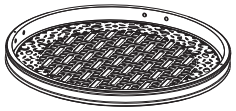	B. LEG CONNECTOR BRACKET Part No.AT73113 Qty 1 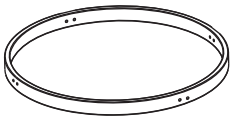	C. TABLE LEG Part No.AT73114 Qty 4 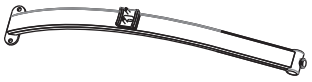

Hardware

(H1) 1/4" X 20 MM BOLT PART NO:HW0802 Qty: 8 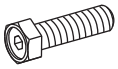	**(H2)** Ø6.5 X 1.0 MM WASHER PART NO:HW0004 Qty: 16 	**(H3)** 1/4" NUT PART NO:HW0014 Qty: 8 

Tools

(H4) HEX BOLT DRIVER PART NO:HW0006 Qty: 1 	**(H5)** HEX WRENCH PART NO:HW0009 Qty: 1 	

Step 1 - Step 4

Step 1

(H1) 1/4" X 20 MM BOLT Qty: 8	**(H2)** Ø6.5 X 1.0 MM WASHER Qty: 8

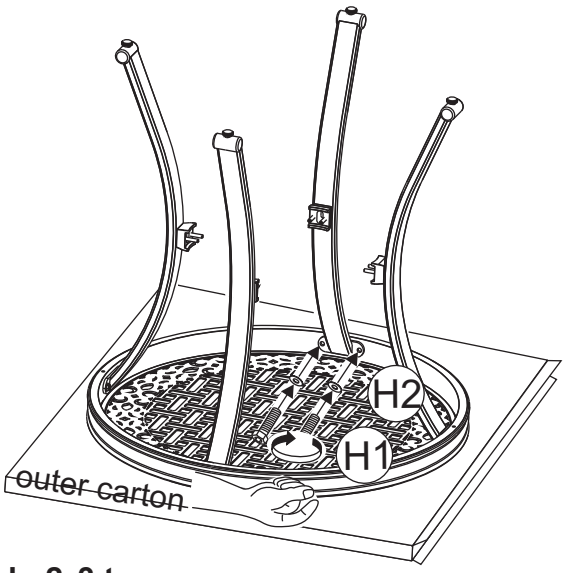

Hand tighten only 2-3 turns.

Step 2

(H2) Ø6.5 X 1.0 MM WASHER Qty: 8	**(H3)** 1/4" NUT Qty: 8

Hand tighten only 2-3 turns.

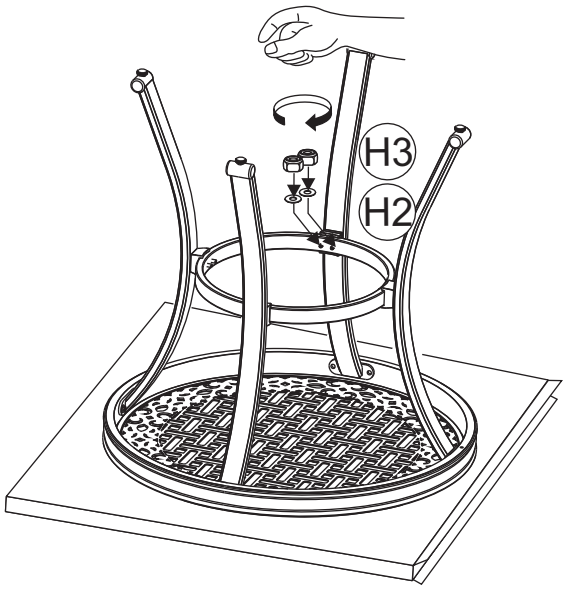

Step 3

(H4) HEX BOLT DRIVER Qty: 1	(H5) HEX WRENCH Qty: 1
	

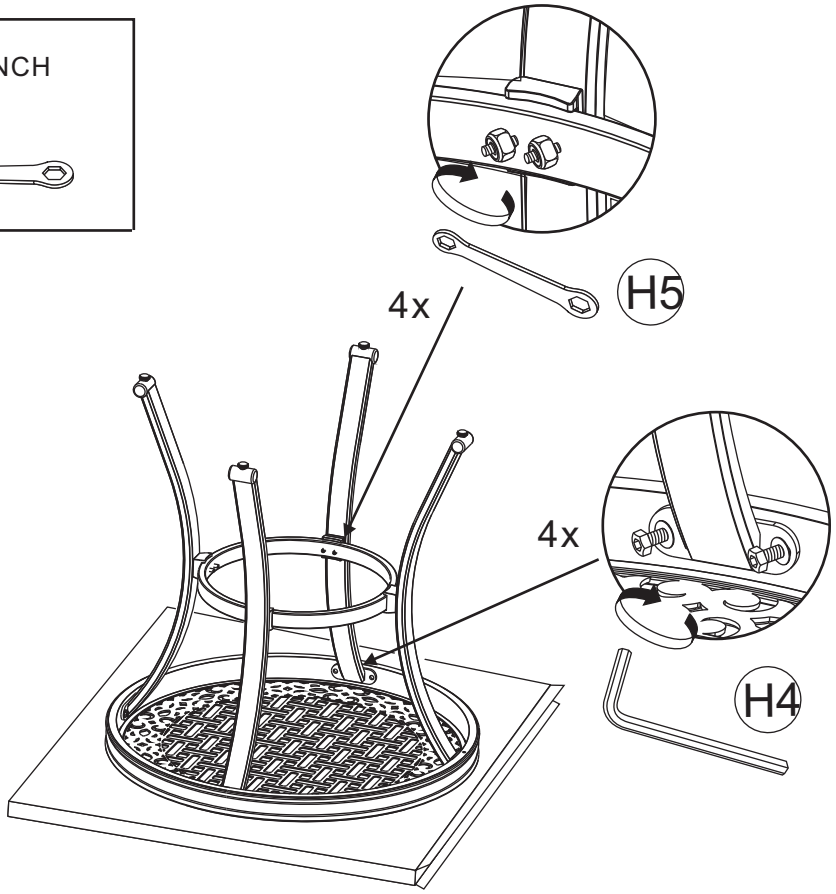

NOTE: Bolts must be FULLY tightened.

Step 4

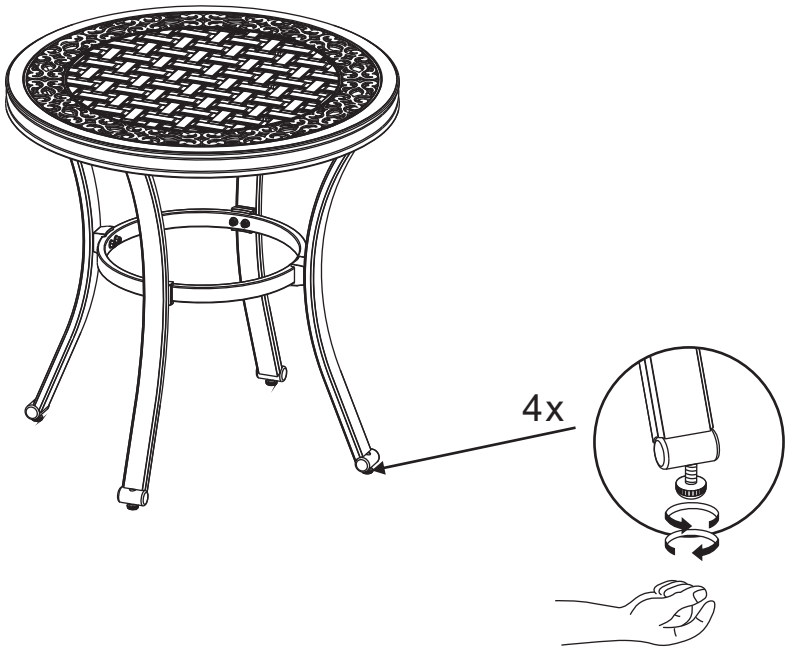

Care & Use Instructions

CARE AND MAINTENANCE

FRAMES
Cleaning - Use mild soap and warm water. Do not use abrasive materials, cleansers or bleach products. Rinse with clean water and dry thoroughly.

Maintenance - Periodically clean and dry thoroughly. Be sure to drain any water accumulated inside the frames. To thoroughly drain frames, remove foot caps and tilt the frames, if necessary, to remove all water. This is critical. Water allowed to accumulate inside the frames and then exposed to sub-freezing temperatures can cause damage to the frame tubing. Always clean, drain and dry thoroughly before storing for the winter. For best results, always store or cover your furniture when not in use. We recommend commercially available outdoor furniture covers. Any small nicks or scratches can be covered with a light application of touch-up paint.

** When cleaning or moving large or heavy items, always have two people work together. Never drag furniture.

FABRICS (CUSHIONS/SLINGS)
Cleaning - Wipe minor spills immediately. Clean with mild soap, warm clean water, and soft cloth. Do not use abrasive materials, cleaners, or bleach products. Although fabric has been treated to resist stains, occasional use of commercially available fabric cleaners may be necessary. Follow manufacturer's instructions.

Maintenance - The best way to maintain the beauty of cushions and slings is to store them in a dry area and out of the elements when not in use or cover with commercially available outdoor furniture covers.

STRAPS
Cleaning - Wash frequently with mild soap, warm water and a soft cloth. Rinse thoroughly with warm, clean water. Do not use abrasive materials, cleansers or bleach products.

Maintenance - Periodic application of commercially available vinyl cleaners and vinyl protectors will enhance the look and prolong the life of straps. If your strap chair has cushions, make sure any vinyl protectors applied are completely dry before placing cushion back on the chair.

Warranty Information

This product component has a 5 year guarantee against defects in material and/or workmanship. If you have any questions regarding the warranty or spare / replacement parts, please call our toll-free number 1-800-416-3511 or email us at customerservice@agio-usa.com

NOTE: Please consider recycling all applicable packaging material.

Distributed by Sam's West Inc.
2101 SE Simple Savings Dr.
Bentonville, Arkansas 72716-0745

Made in China

Need Assistance? Visit us at: samsclub.com/membersmarkhelp