Manitowoc

# Q-210/270 Ice Cube Machines

## Models

- ☐ QD-0212A
- ☐ QY-0214A
- ☐ QD-0272A
- ☐ QY-0274A
- ☐ QD-0213W
- ☐ QY-0215W
- ☐ QD-0273W
- ☐ QY-0275W

ENERGY STAR PARTNER

Q-210

Q-270

### Refreshing! The New Manitowoc Undercounters

- Up to 220 lbs. (100 kgs) daily ice production
- Up to CEE Tier 2 energy and water use rating
- Only 26" (66.04 cm) wide, 26.50" (67.31 cm) deep, and 38.50" (82.55 cm) high on 6" (15.24 cm) legs
- 80 lb. (36.6 kg) ice storage capacity
- Up to 290 lbs. (132 kgs) daily ice production
- Only 30" (76.2 cm) wide, 28.16" (71.52 cm) deep, and 38.50" (97.79 cm) high on 6" (15.24 cm) legs
- 100 lb. (45.45 kg) ice storage capacity

## Standard Features

- **Wide Assortment** - undercounter sizes to meet every ice need
- **Updated Aesthetics** - Clean, crisp coordinated bin interior
- **Convenient Access to Ice** - Ergonomic angled bin door providing visibility and easy access to ice without bending over
- **Enhanced Function** - EZ slide door elevates the user experience and improves product reliability
- **Improved Sanitation** - AlphaSan® added to key internal components to extend time between cleanings
- **Simplified Installation** - New flat right angle plug for easier installation in tight spaces
- Manitowoc proven vertical evaporator using proprietary technology – made in Manitowoc, WI.
- Bin door slides up and out of the way for maximum access
- Stainless steel exterior
- Patented cleaning and sanitizing technology
- R-404A CFC-free refrigerant

## Warranty

- 5-year parts and 5-year labor coverage on ice machine evaporator
- 5-year parts and 3-year labor coverage on ice machine compressor
- 3-year parts-and-labor coverage on all other ice machine, dispenser, and storage bin components

## Specifications

**BTU Per Hour:**
Q-210: 2,400 (average)
3,400 (peak)

Q-270: 3,800 (average)
6,000 (peak)

**Compressor:**
Nominal rating: 1/3 HP

**Cupra-Nickel Condenser:**
(Water-cooled models)
Adds protection from corrosive water elements.

**Operating Limits:**
- Ambient Temperature Range: 40˚ to 110˚F (4.4˚ to 43.3˚C)
- Water Temperature Range: 45˚ to 90˚F (4.4˚ to 32.2˚C)
- Water Pressure Ice Maker Water In:
  Min. 20 psi (137.9 kPA)
  Max. 80 psi (551.1 kPA)
- Condenser Inlet Water In: (Water-cooled only)
  Min. 20 psi (137.9 kPA)
  Max. 150 psi (1,034.2 kPA)

## Ice Machine Electric

115/60/1. (208-230/60/1 and 230/50/1 available.) 115/60/1 ice machines are factory pre-wired with a 6' (180 cm) power cord and NEMA 5-15P-plug configuration. 208-230/60/1 ice machines are factory pre-wired with a 6' (180 cm) power cord only, no plug is supplied.

**Total Amps:**
Q-210: 115/60/1: Air-cooled: 6.5 amps / Water-cooled: 6.1 amps
208-230/60/1: Air-cooled: 3.6 amps / Water-cooled: 3.1 amps

Q-270: 115/60/1: Air-cooled: 10.7 amps. / Water-cooled: 9.9 amps.
208-230/60/1: Air-cooled: 5.2 amps / Water-cooled: 4.7 amps

**Maximum fuse size:**
Air and Water-cooled: 15 amps
HACR-type circuit breakers can be used in place of fuses.

## Ice Shape

Half Dice
3/8" x 1 1/8" x 7/8"
(.95 x 2.86 x 2.22 cm)

Dice
7/8" x 7/8" x 7/8"
(2.22 x 2.22 x 2.22 cm)

AHRI CERTIFIED · NSF · c UL US LISTED · CE · AutoQuotes · QUALITY MANAGEMENT SYSTEM CERTIFIED BY DNV ISO 9001:2008

**2110 South 26th Street**
**PO Box 1720**
**Manitowoc, WI 54221-1720 USA**

**Tel: 1.920.682.0161**
**Fax: 1.920.683.7589**

**www.manitowocice.com**

Manitowoc

Manitowoc

# Q-210/270 Ice Cube Machines

## Q-210

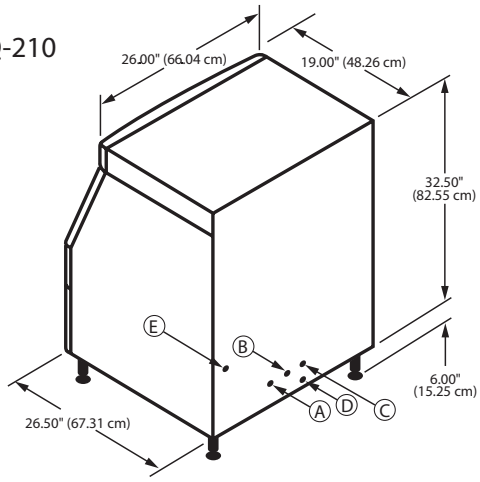


Ⓐ Electrical Entrance (2) Options
Ⓑ 3/8" (0.95 cm) F.P.T. Ice Making Water Inlet
Ⓒ 1/2" (1.27 cm) F.P.T. Minimum Water Condenser Outlet (water-cooled units)
Ⓓ 3/8" (0.95 cm) F.P.T. Water Condenser Inlet (water-cooled units)
Ⓔ 1/2" (1.27 cm) F.P.T. Ice Bin Drain

***Installation Note***
*Recommended clearance for top, sides, and back is 5" (12.7 cm) however, there is no minimum clearance required.*

## Q-270

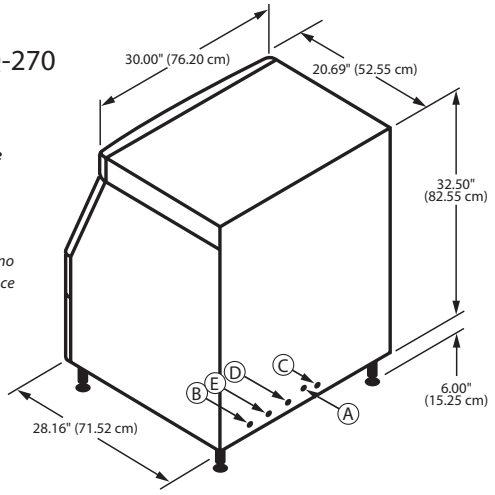


Ⓐ Electrical Entrance (2) Options
Ⓑ 1/2" (0.95 cm) F.P.T. Ice Making Water Inlet
Ⓒ 1/2" (1.27 cm) F.P.T. Minimum Water Condenser Outlet (water-cooled units)
Ⓓ 3/8" (0.95 cm) F.P.T. Water Condenser Inlet (water-cooled units)
Ⓔ 1/2" (1.27 cm) F.P.T. Ice Bin Drain

## Specifications

| Model | Ice Shape | Ice Production 24 Hours: 70° F Air 50° F Water lbs. | 70° F Air 50° F Water kgs | 90°F Air 70° F Water lbs. | 90°F Air 70° F Water kgs | Power kWh/100 lbs. @ 90°/70° | Potable water usage gal/100 lbs. ice @ 90°/70°F | ENERGY STAR® |
|---|---|---|---|---|---|---|---|---|
| QD-0212A | dice | 215 | 98 | 147 | 67 | 10.3 | 34 | ★ |
| QD-0213W | dice | 220 | 100 | 181 | 82 | 7.1 | 34 | |
| QY-0214A | half-dice | 215 | 98 | 147 | 67 | 10.3 | 34 | ★ |
| QY-0215W | half-dice | 220 | 100 | 181 | 82 | 7.1 | 34 | |
| QD-0272A | dice | 280 | 127 | 204 | 93 | 9.5 | 32 | |
| QD-0273W | dice | 290 | 132 | 233 | 106 | 7.7 | 32 | |
| QY-0274A | half-dice | 280 | 127 | 204 | 93 | 9.5 | 32 | |
| QY-0275W | half-dice | 290 | 132 | 233 | 106 | 7.7 | 32 | |
| Water usage/100 lbs./45.4 kgs of Ice | | | | | | | | |
| Water-cooled Condenser: Q-210: 149 gal. / 537 liters • Q-270: 175 gal. / 662 liters | | | | | | | | |

### Air Flow Top View

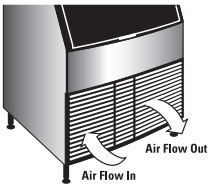


Air in left, air out right, no side vents. Great for installation under countertops and next to other equipment.

### Front Access

Initiate ice, off and clean operations with simple upfront selector switch. No need to remove front panel.

### Air Filter

Slides out from left side front without tools, easy to clean, reusable filter protects condenser from lint, grease and dust.

4674A ©2011 Manitowoc 3/11 Continuing product improvement may necessitate change of specifications without notice.

**2110 South 26th Street**
**PO Box 1720**
**Manitowoc, WI 54221-1720 USA**

**Tel: 1.920.682.0161**
**Fax: 1.920.683.7589**
**www.manitowocice.com**

© Mixed Sources
Product group from well-managed forests, controlled sources and recycled wood or fiber
www.fsc.org Cert no. SW-COC-001886
© 1996 Forest Stewardship Council
FSC

Manitowoc